Skew on Valley side Connection - Purlin to Rafter Hip Clip Details with "Concealed Nut" Flange Brace Connection

Page	Date	Rev.
CF02102	Dec '12	01

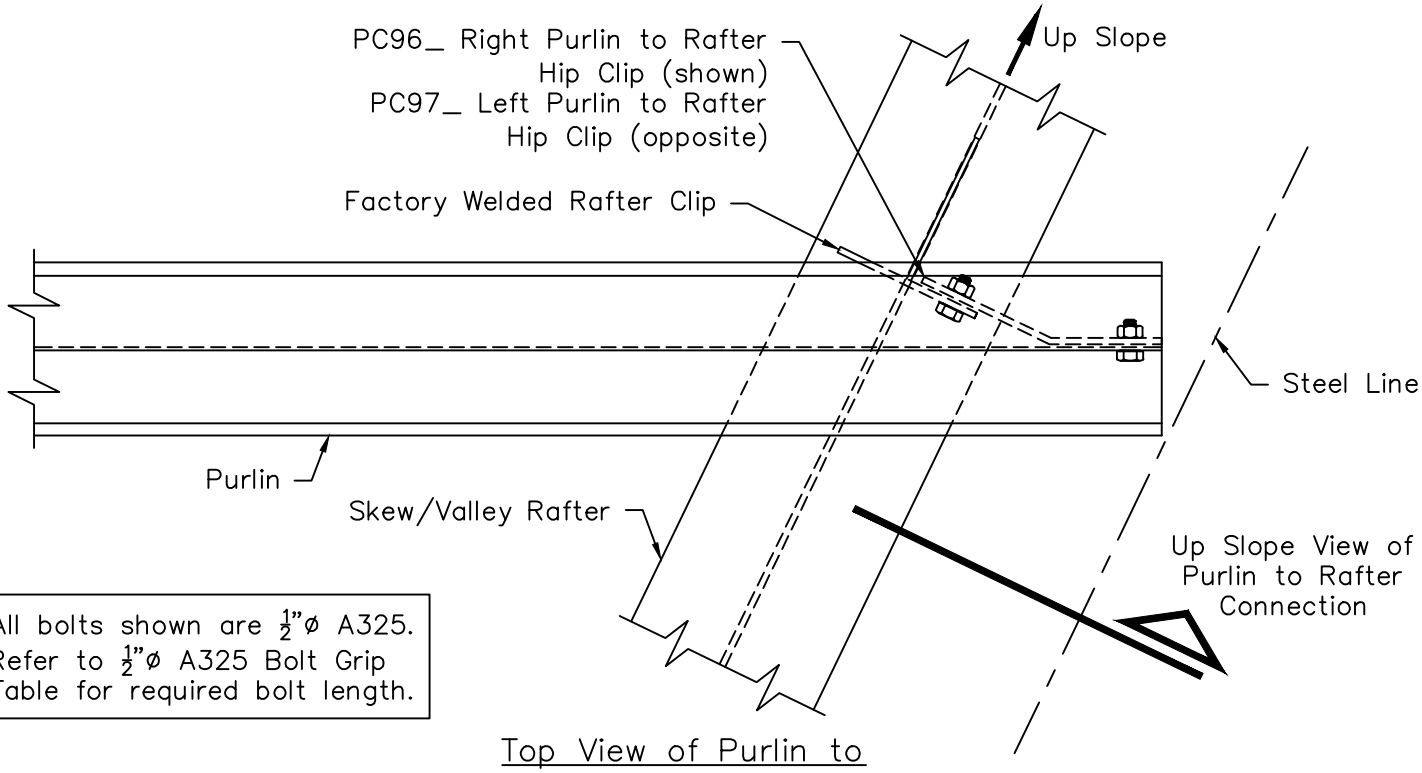

All bolts shown are $\frac{1}{2}$"ø A325. Refer to $\frac{1}{2}$"ø A325 Bolt Grip Table for required bolt length.

Top View of Purlin to Rafter Connection

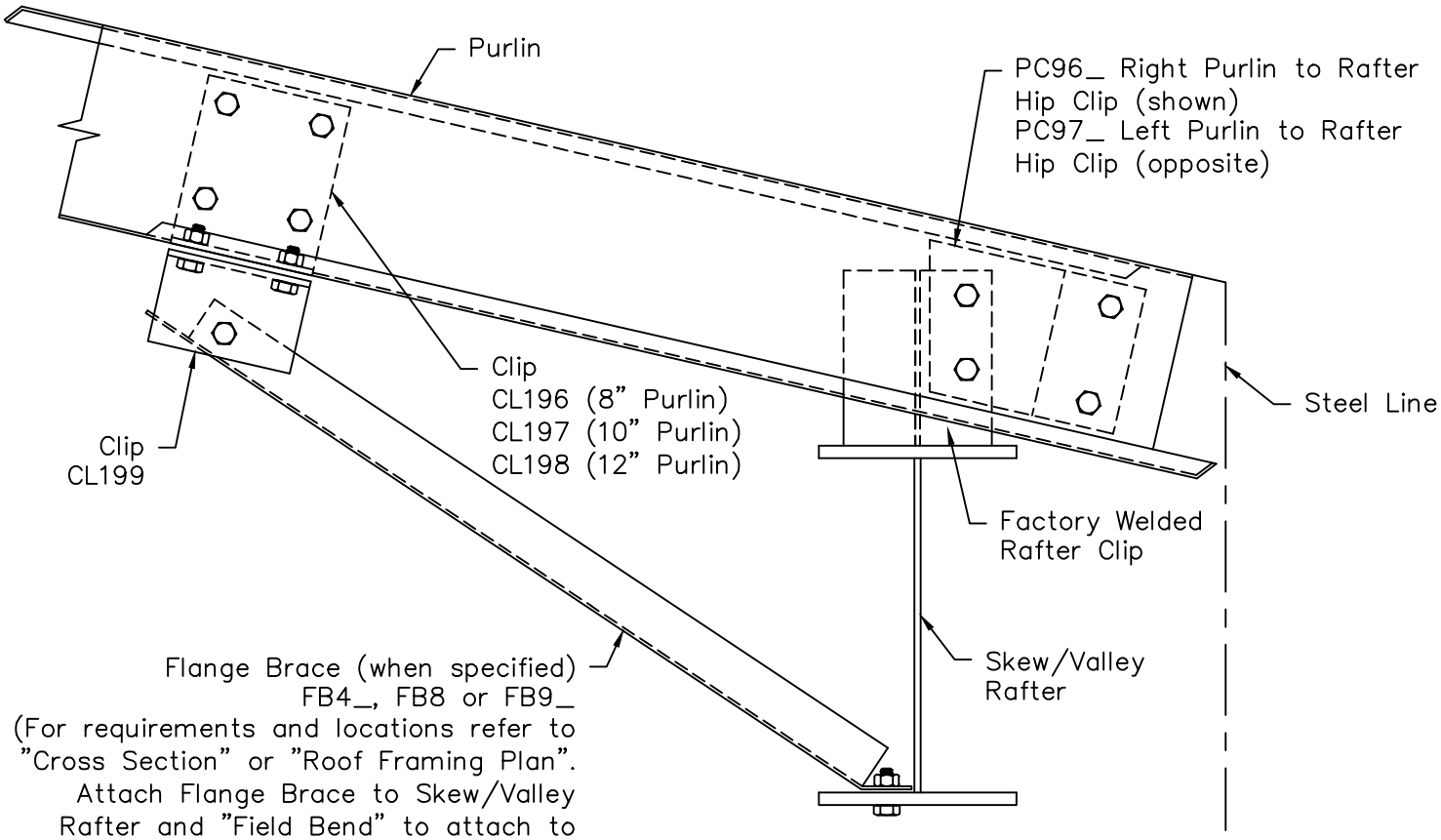

Up Slope View of Purlin to Rafter Connection