Flush Transverse Partition - 1" Inset Load Bearing Column at Slope
Type 3 Connection without Column Extension

Page CP02016
Date Sep '12 Rev. 01

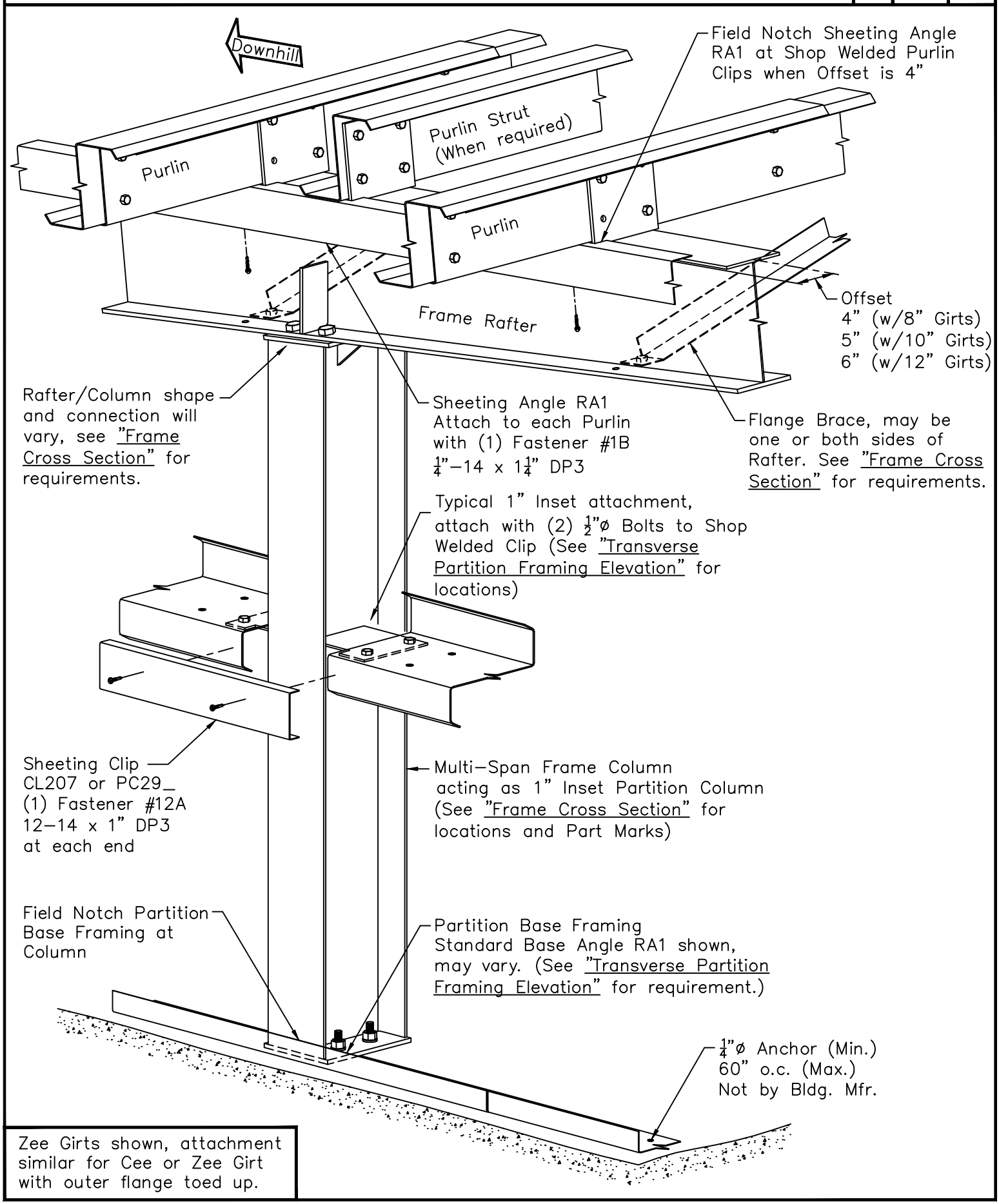

Zee Girts shown, attachment similar for Cee or Zee Girt with outer flange toed up.